# VASASTAN

GB

Design and Quality
IKEA of Sweden

**ENGLISH**

Please refer to the last page of this manual for the full list of IKEA appointed After Sales Service Provider and relative national phone numbers.

## Contents


| | |
|---|---|
| Safety information | 4 |
| Safety instructions | 7 |
| Installation | 9 |
| Product description | 10 |
| Daily use | 11 |
| Hints and tips | 12 |
| Care and cleaning | 12 |
| Troubleshooting | 14 |
| Technical data | 14 |
| Electrical connection | 15 |
| Gas connection | 16 |
| Energy efficiency | 18 |
| Environmental concerns | 19 |
| IKEA guarantee | 19 |


Subject to change without notice.

## ⚠ Safety information

Before the installation and use of the appliance, carefully read the supplied instructions. The manufacturer is not responsible if an incorrect installation and use causes injuries and damage. Always keep the instructions with the appliance for future reference.

## Children and vulnerable people safety

- This appliance can be used by children aged from 8 years and above and persons with reduced physical, sensory or mental capabilities or lack of experience and knowledge if they have been given supervision or instruction concerning the use of the appliance in a safe way and understand the hazards involved. Children of less than 8 years of age and persons with very extensive and complex disabilities shall be kept away from the appliance unless continuously supervised.
- Children should be supervised to ensure that they do not play with the appliance.
- Keep all packaging away from children and dispose of it appropriately.

- WARNING: The appliance and its accessible parts become hot during use. Keep children and pets away from the appliance when in use and when cooling down.
- If the appliance has a child safety device, it should be activated.
- Children shall not carry out cleaning and user maintenance of the appliance without supervision.

## General Safety

- This appliance is for cooking purposes only.
- This appliance is designed for single household domestic use in an indoor environment.
- This appliance may be used in, offices, hotel guest rooms, bed & breakfast guest rooms, farm guest houses and other similar accommodation where such use does not exceed (average) domestic usage levels.
- WARNING: The appliance and its accessible parts become hot during use. Care should be taken to avoid touching heating elements.
- Do not operate the appliance by means of an external timer or separate remote-control system.
- WARNING: Unattended cooking on a hob with fat or oil can be dangerous and may result in fire.
- Never use water to extinguish the cooking fire. Switch off the appliance and cover flames with e.g. a fire blanket or lid.
- CAUTION: The cooking process has to be supervised. A short term cooking process has to be supervised continuously.
- WARNING: Danger of fire: Do not store items on the cooking surfaces.
- Metallic objects such as knives, forks, spoons and lids should not be placed on the hob surface since they can get hot.
- Do not use the appliance before installing it in the built-in structure.

- Disconnect the appliance from the electrical supply before maintenance.
- Do not use a steam cleaner to clean the appliance.
- If the glass ceramic surface / glass surface is cracked, switch off the appliance and unplug it from the mains. In case the appliance is connected to the mains directly using junction box, remove the fuse to disconnect the appliance from power supply. In either case contact the Authorised Service Centre.
- In case of hotplate glass breakage:
  - shut immediately off all burners and any electrical heating element and isolate the appliance from the power supply,
  - do not touch the appliance surface,
  - do not use the appliance.
- If the supply cord is damaged, it must be replaced by the manufacturer, the Authorised Service Centre or similarly qualified persons in order to avoid a hazard.
- Where the appliance is directly connected to the power supply, an all-pole isolating switch with a contact gap is required. Complete disconnection in compliance with the conditions specified in overvoltage category III must be guaranteed. The earth cable is excluded from this.
- When you route the mains cable, make sure that the cable doesn't come into direct contact (for example using insulating sleeving) with parts that can reach temperatures of more than 50°C above room temperature.
- WARNING: Use only hob guards designed by the manufacturer of the cooking appliance or indicated by the manufacturer of the appliance in the instructions for use as suitable or hob guards incorporated in the appliance. The use of inappropriate guards can cause accidents.

# Safety instructions

## Installation

⚠ **Warning!** The appliance must be installed by the authorised installer.

- Remove all the packaging.
- Do not install or use a damaged appliance.
- Follow the installation instructions supplied with the appliance.
- Keep the minimum distance from other appliances and units.
- Always take care when moving the appliance as it is heavy. Always use safety gloves and enclosed footwear.
- Seal the cut surfaces with a sealant to prevent moisture to cause swelling.
- Protect the bottom of the appliance from steam and moisture.
- Do not install the appliance adjacent to a door or under a window. This prevents hot cookware falling from the appliance when the door or the window is opened.
- If the appliance is installed above drawers make sure that the space, between the bottom of the appliance and the upper drawer, is sufficient for air circulation.
- The bottom of the appliance can get hot. Make sure to install a non-combustible separation panel under the appliance to prevent access to the bottom.
  Refer to the Assembly Instructions.

## Electrical Connection

⚠ **Warning!** Risk of fire and electric shock.

- All electrical connections should be made by the authorised installer.
- The appliance must be earthed.
- Before carrying out any operation make sure that the appliance is disconnected from the power supply.
- Make sure that the parameters on the rating plate are compatible with the electrical ratings of the mains power supply.
- Make sure the appliance is installed correctly. Loose and incorrect electricity mains cable or plug (if applicable) can make the terminal become too hot.
- Use the correct electricity mains cable.
- Do not let the electricity mains cable tangle.
- Make sure that a shock protection is installed.
- Use the strain relief clamp on the cable.
- Make sure the mains cable or plug (if applicable) does not touch the hot appliance or hot cookware, when you connect the appliance to the near sockets.
- Do not use multi-plug adapters and extension cables.
- Make sure not to cause damage to the mains plug (if applicable) or to the mains cable. Contact our Authorised Service Centre or an electrician to change a damaged mains cable.
- The shock protection of live and insulated parts must be fastened in such a way that it cannot be removed without tools.
- Connect the mains plug to the mains socket only at the end of the installation. Make sure that there is access to the mains plug after the installation.
- If the mains socket is loose, do not connect the mains plug.
- Do not pull the mains cable to disconnect the appliance. Always pull the mains plug.
- Use only correct isolation devices: line protecting cut-outs, fuses (screw type fuses removed from the holder), earth leakage trips and contactors.
- The electrical installation must have an isolation device which lets you disconnect the appliance from the mains at all poles. The isolation device must have a contact opening width of minimum 3 mm.

## Gas connection

⚠ **Warning!** Risk of fire and explosion

- All gas connections should be made by the authorised installer.
- Before installation, make sure that the local distribution conditions (nature of the gas and gas pressure) and the adjustment of the appliance are compatible.
- Make sure that there is air circulation around the appliance.
- The information about the gas supply is on the rating plate.
- This appliance is not connected to a device, which evacuates the products of combustion. Make sure to connect the appliance according to current installation regulations. Follow the requirements for adequate ventilation.

## Use

⚠ **Warning!** Risk of injury, burns and electric shock.

⚠ **Caution!** The use of a gas cooking appliance results in the production of heat, moisture and products of combustion in the room in which it is installed. Ensure that the kitchen is well ventilated especially when the appliance is in use.
Prolonged intensive use of the appliance may require additional ventilation, for example the increasing of mechanical ventilation where present, additional ventilation to safely remove the products of combustion to outside (external) air whilst also providing room air changes with additional ventilation. Consult a qualified person before installation of the additional ventilation.

- Do not change the specification of this appliance.
- Remove all the packaging, labelling and protective film (if applicable) before first use.
- Make sure that the ventilation openings are not blocked.
- Do not let the appliance stay unattended during operation.
- Set the cooking zone to “off” after each use.
- Do not put cutlery or saucepan lids on the cooking zones. They can become hot.
- Do not operate the appliance with wet hands or when it has contact with water.
- Do not use the appliance as a work surface or as a storage surface.
- When you place food into hot oil, it may splash.

⚠ **Warning!** Risk of fire and explosion

- Fats and oil when heated can release flammable vapours. Keep flames or heated objects away from fats and oils when you cook with them.
- The vapours that very hot oil releases can cause spontaneous combustion.
- Used oil, that can contain food remnants, can cause fire at a lower temperature than oil used for the first time.
- Do not put flammable products or items that are wet with flammable products in, near or on the appliance.

⚠ **Warning!** Risk of damage to the appliance.

- Do not keep hot cookware on the control panel.
- Do not let cookware boil dry.
- Be careful not to let objects or cookware fall on the appliance. The surface can be damaged.
- Never leave a burner on with empty cookware or without cookware.
- Do not put aluminium foil on the appliance.
- Cookware made of cast iron, aluminium or with a damaged bottom can cause scratches on the glass / glass ceramic. Always lift these objects up when you have to move them on the cooking surface.
- Use only stable cookware with the correct shape and diameter larger than the dimensions of the burners.
- Make sure cookware is centrally positioned on the burners.

- Do not use large cookware that overlap the edges of the appliance. This can cause damage to the worktop surface.
- Use only the accessories supplied with the appliance.
- Do not install a flame diffuser on the burner.
- Do not let acid liquids, for example vinegar, lemon juice or limescale remover, touch the hob. This can cause matt patches.
- Discoloration of the enamel or stainless steel has no effect on the performance of the appliance.

### Care and cleaning

**Warning!** Do not remove the buttons, knobs or gaskets from the control panel. Water may get inside the appliance and cause damage.

- Clean the appliance regularly to prevent the deterioration of the surface material.
- Deactivate the appliance and let it cool down before you clean it.
- Disconnect the appliance from the electrical supply before maintenance.
- Do not use water spray and steam to clean the appliance.
- Clean the appliance with a moist soft cloth. Only use neutral detergents. Do not use any abrasive products, abrasive cleaning pads, solvents or metal objects.
- Do not clean the burners in the dishwasher.

### Service

- To repair the appliance contact the Authorised Service Centre.
- Use original spare parts only.

### Disposal

**Warning!** Risk of injury or suffocation.

- Contact your municipal authority for information on how to discard the appliance correctly.
- Disconnect the appliance from the mains supply.
- Cut off the mains electrical cable close to the appliance and dispose of it.
- Flat the external gas pipes.

## Installation

**Warning!** Refer to Safety chapters.

### General information

**Caution!** Information for authorised installer only.

**Warning!** Use only parts provided with the product. Use only original spare parts.

The manufacturer is not responsible for any injury to persons and pets or damage to property caused by a failure to comply the following requirements.

**Caution!** During the installation, you must refer to the Assembly Instructions.

**Warning!** Installation process must follow the laws, ordinances, directives, and standards, electrical safety rules, and regulations, proper recycling in accordance with the regulations, in force in the country of use.

Depending on the Assembly Instructions, keep the minimum distances between the appliance and other units.

Protect the cut surfaces of the worktop against moisture using a suitable sealant included in the product in additional bag. Seal the appliance to the worktop with no gap. Do not use silicon sealant between the appliance and the worktop. Do not install the appliance next to the doors and under windows. Otherwise, the hot cookware may fall off the pan supports.

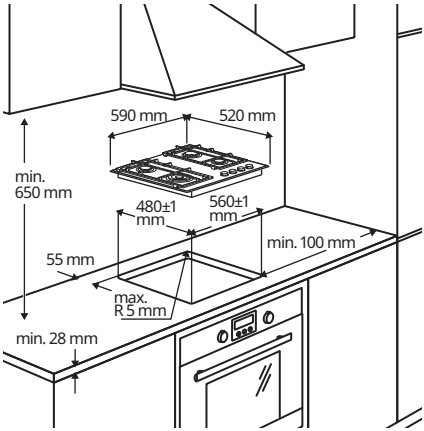


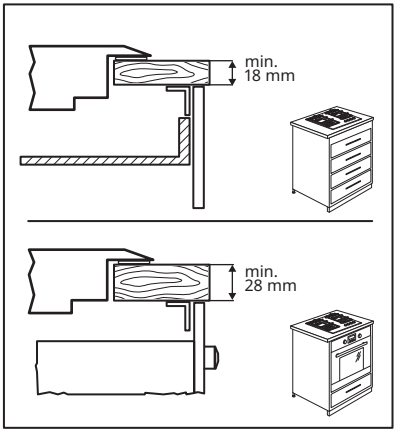


For further information on the installation refer to the Assembly Instruction.

## Product description

### Cooking surface layout

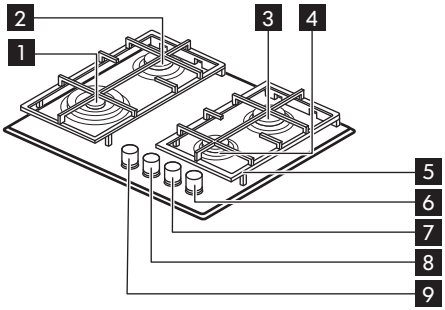


1 Multi Crown burner
2 Semi Rapid burner
3 Semi Rapid burner
4 Auxiliary burner
5 Removable pan supports
6 Auxiliary burner control knob
7 Semi Rapid burner control knob
8 Semi Rapid burner control knob
9 Multi Crown burner control knob

### Burner control knob

The hob burner control knobs are on the right side of the hob.

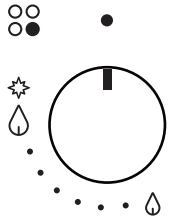

| Symbol | Description |
|---|---|
| ● | off position |

| Symbol | Description |
|---|---|
| ✧ 💧 | there is maximum gas supply / ignition setting |
| 💧 | there is minimum gas supply |
| ○○ ●○ | to show the position of the burner |

## Daily use

⚠ **Warning!** Refer to Safety chapters.

### Ignition of the burner

ⓘ Always ignite the burner before you place the pots or pans.

To ignite the burner:

1. Push the control knob and turn it anticlockwise to the maximum position marked with ✧ 💧.
2. Keep the control knob pushed for about 5 sec. As a result, thermocouple heats up, and the safety device switches off. If you do not push the knob, the gas supply is interrupted.
3. When you light the flame, you can adjust it.

ⓘ If the burner does not ignite, after a few attempts, check if the crown and its cap are in correct positions.

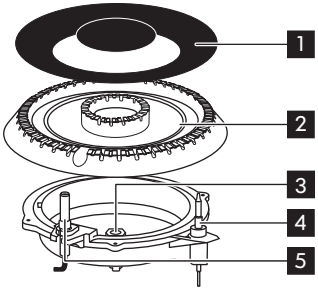


1 Burner cap
2 Burner crown
3 Injector
4 Thermocouple
5 Ignition candle

⚠ **Warning!** Do not keep the control knob pressed for more than 15 seconds. If the burner does not light after 15 seconds, release the control knob, turn it into the off position, and wait for at least 1 minute before trying to light the burner again.

If there is no electricity, you can ignite the burner without an electrical device. In this case, approach the burner with flame, push the relevant knob and turn it anticlockwise to the maximum gas release position.

**Warning!** Be careful when you use open fire in the kitchen environment. The manufacturer declines any responsibility in case of misusing the flame.

If the burner accidentally goes out, turn the control knob to the off position and wait for at least 1 minute before trying to light it again.

When you switch on the mains after installation or a power cut, the spark generator activates automatically.

The hob is supplied with the progressive valves. They make the flame regulation more precise.

### Turning the burner off

To put the flame out, turn the relevant control knob clockwise to the symbol ●.

**Warning!** Always turn the flame down or switch it off before you remove the pans from the burner.

## Hints and tips

**Warning!** Refer to Safety chapters.

### Diameters of cookware

Keep the cookware centered on the pan supports.

Use pots and pans with bottom fitting the size of burner used.

| Burner | Minimum diameter of pots and pans | Maximum diameter of pots and pans |
|---|---|---|
| Multi Crown | 180 mm | 260 mm |

| Burner | Minimum diameter of pots and pans | Maximum diameter of pots and pans |
|---|---|---|
| Auxiliary | 80 mm | 160 mm |
| Back left (Semi-rapid) | 120 mm | 220 mm |
| Back right (Semi-rapid) | 120 mm | 220 mm |

The bottom of the cookware should be as thick and flat as possible.

## Care and cleaning

**Warning!** Refer to Safety chapters.

### General information

**Warning!** Switch the appliance off and let it cool down before you clean it.

**Warning!** Do not clean the appliance with steam blasters or high-pressure cleaners.

**Warning!** Do not use abrasive cleaners, steel wool pads or acids. They damage the appliance.

**Warning!** Do not clean the burner cap and crown in a dishwasher. Risk of corrosion.

To remove any food remains, wash the enamelled elements, caps, and crowns, with warm soapy water.

Remove fat or sugar stains immediately. Do not leave them on the hob surface while cooking.

Wash stainless steel elements with water, and dry with a soft cloth.

This model is equipped with an electrical ignition. To avoid problems with lightning, keep the ceramic "candle" with electrode clean.

Do not put the pan supports in a dishwasher. Wash them manually and dry with a soft cloth. After cleaning, make sure that the pan supports are in correct position.

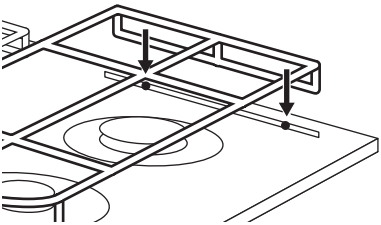

To check the conditions of the gas supply pipe and the pressure adjuster, contact the After Sales Service Provider. The service is not free of charge.

## Removing pan supports

For easier cleaning, pan supports can be removed from the hob. Lift up the pan supports keeping them in horizontal position.

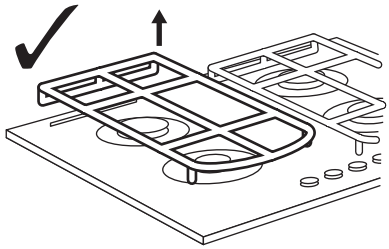

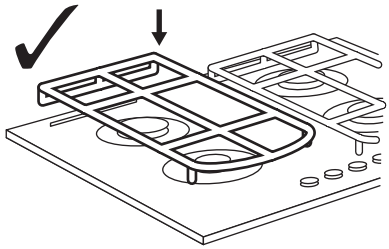

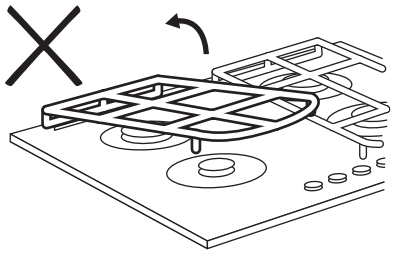

## Troubleshooting

⚠ **Warning!** Refer to Safety chapters.

### What to do if...

| Problem | Possible cause | Remedy |
|---|---|---|
| There is no spark when lightning the gas. | There is no electrical supply. | Check if the unit is plugged in and the electrical supply is switched on. |
| | There is no electrical supply. | Check the house electric installation fuse. |
| | Burner cap and crown are placed incorrectly. | Check if the burner cap and crown are placed correctly. |
| The flame is extinguishes immediately after lightning. | Thermocouple is not heated enough. | After lightning the flame, keep the knob pushed for about 5 seconds. |
| The gas ring burns unevenly. | Burner crown is blocked with food remains. | Check if the main injector and the burner crown are not blocked with food remains. |

If there is an error, first try to find a solution to the problem yourself. If you cannot find a solution to the problem yourself, contact your IKEA store call centre. You can find a full list of IKEA appointed contacts at the end of this manual.

ⓘ If the appliance is misused wrongly or installed not by authorised technician, the service is not free of charge, even during the warranty period.

## Technical data

### Hob dimensions

| | |
|---|---|
| Width | 590 mm |
| Depth | 520 mm |
| Built in height | 40 mm |

### Rating Plate

MODEL
000.000.00 21552
Made In Italy
© Inter IKEA Systems B.V. 2021
IKEA of Sweden AB
SE - 34381 Älmhult
PI-000000-0
IKEA
2122
TYPE H0000-0/0 PNC. 000000000 00
S.N.: 00000000

D ZO
CE 21 0476
MOD:
G2X CXX mbar = XXkW
G3X CXX mbar = XXXg/h
Max Power = 6W
220-240 V ~ 50-60 Hz
0000000000

00000000000000000

The graphic above represents the rating plate of the appliance, without serial number which is generated dynamically during the production process. The rating plate is located below the surface of the casing.

Dear Customer, please apply the sticker which you can find in the plastic bag attached to the hob packaging. As a result, in case you need our assistance, the After Sales Service Provider can identify precisely your hob. Thank you for your help.

## Electrical connection

⚠ **Warning!** Refer to Safety chapters.

### Connection cable

⚠ **Caution!** Information for authorised installer only.

⚠ **Warning!**
The appliance must be earthed.

⚠ **Warning!**
Risk of injury from electrical current.

- The electrical mains terminal is under voltage.
- Make sure that the electrical mains terminal is free of voltage.
- Loose and inappropriate plug and socket connections. May overheat the terminal.
- Make sure that the clamping connections are installed correctly.
- Secure the cable with the strain relief clamp.

Before connecting, check that the nominal voltage of the appliance stated on the rating plate, corresponds to the available supply voltage. Also, check the power rating of the appliance and make sure that the wire is suitably sized to suit the appliance power rating. Refer to the Technical data chapter.

The rating plate is located below the surface of the casing.

The appliance is supplied with a connection cable. The cable must be provided with a proper plug, which supports the load marked on the identification plate. Refer to the Technical data chapter.

The plug has to be fitted in a proper socket. If connecting the appliance directly to the electric system, it is necessary that you install a double pole switch between the appliance and the electricity supply, with a minimum gap of 3 mm between the switch contacts. The double pole has to be of a type suitable for the required load in compliance with the current rules.

The connection cable has to be placed in order that, in each part, it cannot reach a 90 °C temperature. The blue neutral cable must be connected to the terminal block marked with "N". The brown or black phase cable, fitted in the terminal block contact marked with "L", must always be connected to the live phase.

### Electrical Requirements

You can check the parameters of adjustment setting for this appliance on the rating plate. Refer to the Technical data chapter.

The manufacturer declines any liability if these safety measures are not observed.

This hob is designed to be connected to a 220-240 V 50-60 Hz AC electrical supply.

Before switching on, make sure the electricity supply voltage is the same as that indicated on the hob rating plate. The rating plate is located below the surface of the casing.

The hob is supplied with a 3 core flexible supply cord.

Upon completion there must be no cut, or stray strands of wire present and the cord clamp must be secure over the outer sheath.

### Replacement of the connection cable

**Warning!** To replace the connection cable, the technician must have a specific equipment.

In this case, only cable type H03V2V2-F T90 must be used. The cable section must be suitable to the voltage and the working temperature. The yellow and green earth wire 2 must be approximately 2 cm longer than the brown or black phase wire 1.

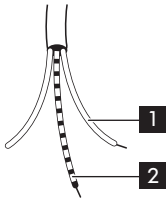


## Gas connection

**Warning!** Refer to Safety chapters.

**Caution!** Information for authorised installer only.

### Connection to main pipe

**Warning!** This appliance is not connected to a combustion products evacuation device.

Before you proceed with the installation, make sure that the local distribution conditions, nature of the gas and gas pressure, and the adjustment of the appliance are compatible.

The installation must be compliant with the current local regulations. Complying with the local regulations, the connection of the cooktop to the gas pipe network or gas cylinder must be made by means of a rigid copper or steel pipe with fittings, or by means of a continuous surface stainless steel hose.

If there is a problem with the pipe, do not repair it yourself. Contact the local After Sales Service Provider. Refer to the Service chapter.

The connection must be installed correctly and fixed into the hob connection pipe. Otherwise, gas may leak from the connection pipe.

**Warning!** When you finish the installation, check the sealing and pipe fixing. To check the installation, use soapy water. Do not use the flame.

## Gas setting conversion

You can check the parameters of adjustment setting for this appliance on the rating plate. Refer to the Technical data chapter.

You can use this model with natural gas. However, you can convert it for use with other gases, providing the correct injectors.

For more information on injector replacement, refer to the Technical data chapter.

**Warning!** Conversion or replacement can only be performed by a authorised technician.

To replace injectors:

1. Remove pan support.
2. Remove burner cap and crown.
3. Using a socket spanner 7, unscrew and remove the injectors, and replace them with the ones required for the type of gas in use.
4. Reassemble the parts, following the same procedure backwards.

Place the label with relevant information for new type of gas close to the supply pipe before sealing the appliance. If the appliance is already sealed please stick it directly on the user manual booklet, after Technical data chapter, and close to the rating plate drawing.

You can find this label in package supplied with appliance.

If the feeding gas pressure is different or variable from the required one, you must install an appropriate pressure adjuster, which is not supplied with the product. If needed, it must be ordered separately from the local After Sales Service Provider, refer to the Service chapter. The pressure adjuster must be fitted on gas supply pipe, in compliance with the rules of the force.

The rating plate is located below the surface of the casing.

## Adjusting flame level

When you install the hob, it is necessary to check the minimum flame setting:

1. Turn the gas tap to the maximum position and ignite.
2. Set the gas tap to the minimum flame position and turn the control knob from minimum to maximum several times. If the flame is unstable or extinguished, follow the procedure further.
3. Re-ignite the burner and set to minimum.
4. Remove the control knob .
5. To adjust, use a thin bladed screwdriver and turn the adjustment screw until the flame is steady and does not extinguish when the knob is turned from minimum to maximum, and vice versa (see following picture).

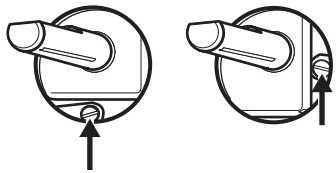

6. Repeat this procedure for all burners.
7. Reassemble the knobs.

⚠ **Warning!** If the appliance is connected to liquid gas (G31 propane or G30 butane), the regulation screw must be fastened as tightly as possible.

## Energy efficiency

### Product information according to EU 66/2014

| | | |
|---|---|---|
| Model identification | | VASASTAN 805.234.39, VASASTAN 705.234.30, VASASTAN 105.234.47, VASASTAN 305.234.32 |
| Type of hob | | Built-in hob |
| Number of gas burners | | 4 |
| Energy efficiency per gas burner (EE gas burner) | Left rear - Semi-rapid | 60.6% |
| | Right rear - Semi-rapid | 60.6% |
| | Left front - Multi Crown | 57.7% |
| | Right front - Auxiliary | not applicable |
| Energy efficiency for the gas hob (EE gas hob) | | 59.6% |

| | | |
|---|---|---|
| Model identification | | VASASTAN 505.234.50, VASASTAN 905.234.34 |
| Type of hob | | Built-in hob |
| Number of gas burners | | 4 |
| Energy efficiency per gas burner (EE gas burner) | Left rear - Semi-rapid | 59.3% |
| | Right rear - Semi-rapid | 60.3% |
| | Left front - Multi Crown | 53.2% |
| | Right front - Auxiliary | not applicable |
| Energy efficiency for the gas hob (EE gas hob) | | 57.6% |

EN 30-2-1: Domestic cooking appliances burning gas - Part 2-1 : Rational use of energy - General

**Energy saving**

- Before use, make sure that the burners and pan supports are assembled correctly.
- Use cookware with diameters applicable to the size of burners.
- Center the pot on the burner.
- When you heat up water, use only the amount you need.
- If it is possible, always put the lids on the cookware.
- When the liquid starts to boil, turn down the flame to barely simmer the liquid.
- If it is possible, use a pressure cooker. Refer to its user manual.

## Environmental concerns

Recycle materials with the symbol ♲. Put the packaging in relevant containers to recycle it. Help protect the environment and human health by recycling waste of electrical and electronic appliances. Do not dispose of appliances marked with the symbol with the household waste. Return the product to your local recycling facility or contact your municipal office.

## IKEA guarantee

**How long is the IKEA guarantee valid?**

This guarantee is valid for **5 years** from the original date of purchase of your appliance at IKEA. The original sales receipt is required as proof of purchase. If service work is carried out under guarantee, this will not extend the guarantee period for the appliance.

**Who will execute the service?**

IKEA service provider will provide the service through its own service operations or authorized service partner network.

**What does this guarantee cover?**

The guarantee covers faults of the appliance, which have been caused by faulty construction or material faults from the date of purchase from IKEA. This guarantee applies to domestic use only. The exceptions are specified under the headline “What is not covered under this guarantee?” Within the guarantee period, the costs to remedy the fault e.g. repairs, parts, labour and travel will be covered, provided that the appliance is accessible for repair without special expenditure. On these conditions the EU guidelines (Nr. 99/44/EG) and the respective local regulations are applicable. Replaced parts become the property of IKEA.

**What will IKEA do to correct the problem?**

IKEA appointed service provider will examine the product and decide, at its sole discretion, if it is covered under this guarantee. If considered covered, IKEA service provider or its authorized service partner through its own service operations, will then, at its sole discretion, either repair the defective product or replace it with the same or a comparable product.

**What is not covered under this guarantee?**

- Normal wear and tear.
- Deliberate or negligent damage, damage caused by failure to observe operating instructions, incorrect installation or by connection to the wrong voltage, damage caused by chemical or electro-chemical reaction, rust, corrosion or water damage including but not limited to damage caused by excessive lime in the water supply, damage caused by abnormal environmental conditions.
- Consumable parts including batteries and lamps.

- Non-functional and decorative parts which do not affect normal use of the appliance, including any scratches and possible color differences.
- Accidental damage caused by foreign objects or substances and cleaning or unblocking of filters, drainage systems or soap drawers.
- Damage to the following parts: ceramic glass, accessories, crockery and cutlery baskets, feed and drainage pipes, seals, lamps and lamp covers, screens, knobs, casings and parts of casings. Unless such damages can be proved to have been caused by production faults.
- Cases where no fault could be found during a technician's visit.
- Repairs not carried out by our appointed service providers and/or an authorized service contractual partner or where non-original parts have been used.
- Repairs caused by installation which is faulty or not according to specification.
- The use of the appliance in a non-domestic environment i.e. professional use.
- Transportation damages. If a customer transports the product to their home or other address, IKEA is not liable for any damage that may occur during transport. However, if IKEA delivers the product to the customer's delivery address, then damage to the product that occurs during this delivery will be covered by this guarantee.
- Cost for carrying out the initial installation of the IKEA appliance. However, if an IKEA service provider or its authorized service partner repairs or replaces the appliance under the terms of this guarantee, the service provider or its authorized service partner will re-install the repaired appliance or install the replacement, if necessary.

This restriction do not apply to fault-free work carried out by a qualified specialist using our original parts in order to adapt the appliance to the technical safety specifications of another EU country.

**How country law applies**

The IKEA guarantee gives you specific legal rights, which covers or exceed local demands. However these conditions do not limit in any way consumer rights described in the local legislation.

**Area of validity**

For appliances which are purchased in one EU country and taken to another EU country, the services will be provided in the framework of the guarantee conditions normal in the new country. An obligation to carry out services in the framework of the guarantee exists only if the appliance complies and is installed in accordance with:

- the technical specifications of the country in which the guarantee claim is made;
- the Assembly Instructions and User Manual Safety Information;

**The dedicated After Sales Service for IKEA appliances:**

Please do not hesitate to contact IKEA After Sales Service to:

1. make a service request under this guarantee;
2. ask for clarification on installation of the IKEA appliance in the dedicated IKEA kitchen furniture. The service won't provide clarifications related to:
   - the overall IKEA kitchen installation;
   - connections to electricity (if machine comes without plug and cable), to water and to gas since they have to be executed by an authorized service engineer.
3. ask for clarification on user manual contents and specifications of the IKEA appliance.

To ensure that we provide you with the best assistance, please read carefully the Assembly Instructions and/or the User Manual section of this booklet before contacting us.

**How to reach us if you need our service**

Please refer to the last page of this manual for the full list of IKEA appointed contacts and relative national phone numbers.

In order to provide you with a quicker service, we recommend that you use the specific phone numbers listed at the end of this manual. Always refer to the numbers listed in the booklet of the specific appliance you need an assistance for. Before calling us, assure that you have to hand the IKEA article number (8 digit code) and the Serial Number (8 digit code that can be found on the rating plate) for the appliance of which you need our assistance.

**SAVE THE SALES RECEIPT!** It is your proof of purchase and required for the guarantee to apply. Note that the receipt reports also the IKEA article name and number (8 digit code) for each of the appliances you have purchased.

**Do you need extra help?**

For any additional questions not related to After Sales of your appliances, please contact our nearest IKEA store call centre. We recommend you read the appliance documentation carefully before contacting us.

| Country | Phone number | Call Fee | Opening time |
|---|---|---|---|
| **België** | 070 246016 | Binnenlandse gesprekskosten | 8 tot 20 Weekdagen |
| **Belgique** | | Tarif des appels nationaux | 8 à 20. En semaine |
| **България** | +359 2 492 9397 | Според тарифата на оператора за обаждания към стационарен номер | От 8:30 до 17:30 ч в работни дни |
| **Česká Republika** | 246 019721 | Cena za místní hovor | 8 až 20 v pracovních dnech |
| **Danmark** | 70 15 09 09 | Landstakst | man. - fre. 09.00 - 20.00<br>lør. - søn. 09.00 - 18.00 |
| **Deutschland** | +49 1806 33 45 32* | * 0,20 €/Verbindung aus dem Festnetz max. 0,60 €/Verbindung aus dem Mobilfunknetz | Werktags von 8.00 bis 20.00 |
| **Ελλάδα** | 211 176 8276 | Υπεραστική κλήση | 8 έως 20 κατά τις εργάσιμες ημέρες |
| **España** | 91 1875537 | Tarifa de llamadas nacionales | De 8 a 20 en días laborables |
| **France** | 0170 36 02 05 | Tarif des appels nationaux | 9 à 21. En semaine |
| **Hrvatska** | 00385 1 6323 339 | Cijena ovisi o pružatelju telefonske usluge korisnika | radnim danom od ponedjeljka do petka od 08:00 do 16:00 |
| **Ireland** | 0 14845915 | National call rate | 8 till 20 Weekdays |
| **Ísland** | +354 5852409 | Innanlandsgjald fyrir síma | 9 til 18. Virka daga |
| **Italia** | 02 00620818 | Tariffa applicata alle chiamate nazionali | dalle 8 alle 20 nei giorni feriali |
| **Κυπρος** | 22 030 529 | Υπεραστική κλήση | 8.30 έως 16.30 κατά τις εργάσιμες ημέρες |
| **Lietuva** | 5 230 06 99 | Nacionalinių pokalbių tarifai | Pr. - Ketv.: 8:00 - 12:00, 12:45 - 17:00 Pnkt.: 8:00 - 12:00, 12:45 - 15:45 |
| **Magyarország** | 06-1-252-1773 | Belföldi díjszabás | Hétköznap 8.00 és 17.00 óra között |
| **Nederland**<br>**Luxembourg** | 0900 - 235 45 32<br>(0900-BEL IKEA)<br>0031 - 50 316 8772<br>(internationaal) | Geen extra kosten.<br>Alleen lokaal tarief. | ma-vr: 8.00 - 21.00<br>zat: 9.00 - 21.00<br>zon / pub. vakantie: 10.00 - 18.00 |
| **Norge** | 22 72 35 00 | Takst innland | 8 til 20 ukedager |
| **Österreich** | +43-1-2056356 | max. 10 Cent/min. | Mo - Fr 8.00 - 20.00 Uhr |
| **Polska** | 801 400 711 and<br>+48 22 749 60 99 | Koszt zgodny z taryfą operatora | Od 8 do 20 w dni robocze |
| **Portugal** | 211557985 | Chamada Nacional | 9 às 21. Dias de Semana<br>*excepto feriados |
| **România** | 021 211 08 88 | Tarif apel naţional | 8 - 20 în zilele lucrătoare |
| **Россия** | 8 495 6662929 | Действующие телефонные тарифы | с 8 до 20 по рабочим дням<br>Время московское |
| **Schweiz** | 031 5500 324 | Tarif für Anrufe im Bundesgebiet | 8 bis 20 Werktage |
| **Suisse** | | Tarif des appels nationaux | 8 à 20. En semaine |
| **Svizzera** | | Tariffa applicata alle chiamate nazionali | dalle 8 alle 20 nei giorni feriali |
| **Slovenija** | +38618108621 | lokalni strošek je običajna tržna vrednost, odvisna od ponudnika telefonije | 8.00 – 16.00 ob delavnikih |
| **Slovensko** | (02) 3300 2554 | Cena vnútroštátneho hovoru | 8 až 20 v pracovných dňoch |
| **Suomi** | 030 6005203 | pvm/mpm | Ma – To 8:00 -18:00<br>Pe 9:00 -16:00 |
| **Sverige** | 0775 700 500 | lokalsamtal (lokal taxa) | mån-fre 8.30 - 20.00<br>lör-sön 9.30 - 18.00 |
| **United Kingdom** | 020 3347 0044 | National call rate | 9 till 21. Weekdays |
| **Србија** | +381 11 7 555 444<br>(ако позивате изван Србије)<br>011 7 555 444<br>(ако позивате из Србије) | Цена позива у националном саобраћају | Понедељак – субота: 09 – 20<br>Недеља: 09 – 18 |
| **Eesti, Latvija, Україна** | | www.ikea.com | |

867367637-B-522021

© Inter IKEA Systems B.V. 2021

21552

AA-2322063-1